DG Rotating Machine Bases (Synchronous Generators) operation in Microgrids

Copyright © The McGraw-Hill Companies, Inc. Permission required for reproduction or display.

Basic Topology

- In *stator*, a three-phase winding similar to the one described in chapter 4. Since the main voltage is induced in this winding, it is also called *armature winding*.

- In *rotor*, the magnetic field is generated either by a permanent magnet or by applying dc current to rotor winding. Since rotor is producing the main field, it is also called *field winding*. Two rotor designs are common:

Copyright © The McGraw-Hill Companies, Inc. Permission required for reproduction or display.

Exciter Systems for Large Generators

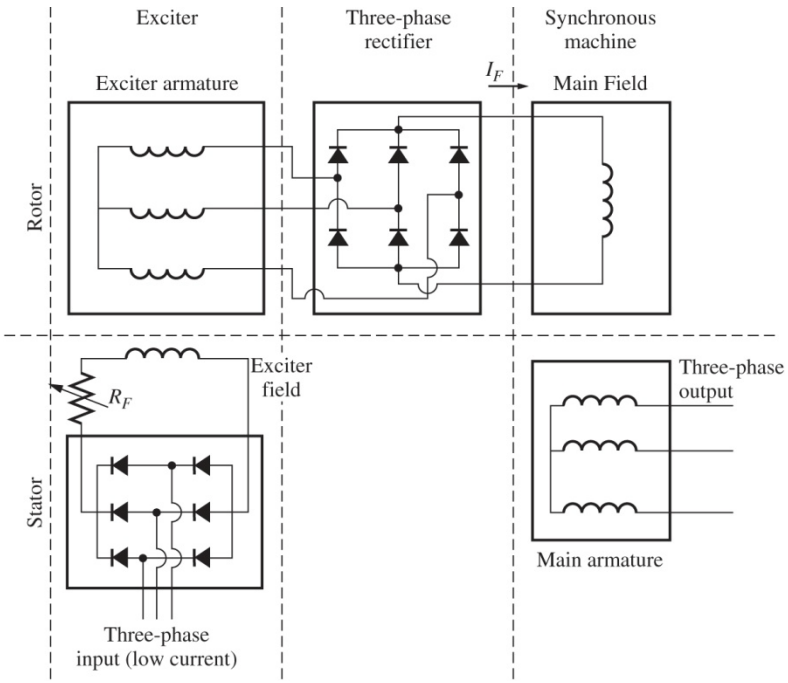

Figure 4-3
Brushless exciter circuit.

Copyright © The McGraw-Hill Companies, Inc. Permission required for reproduction or display.

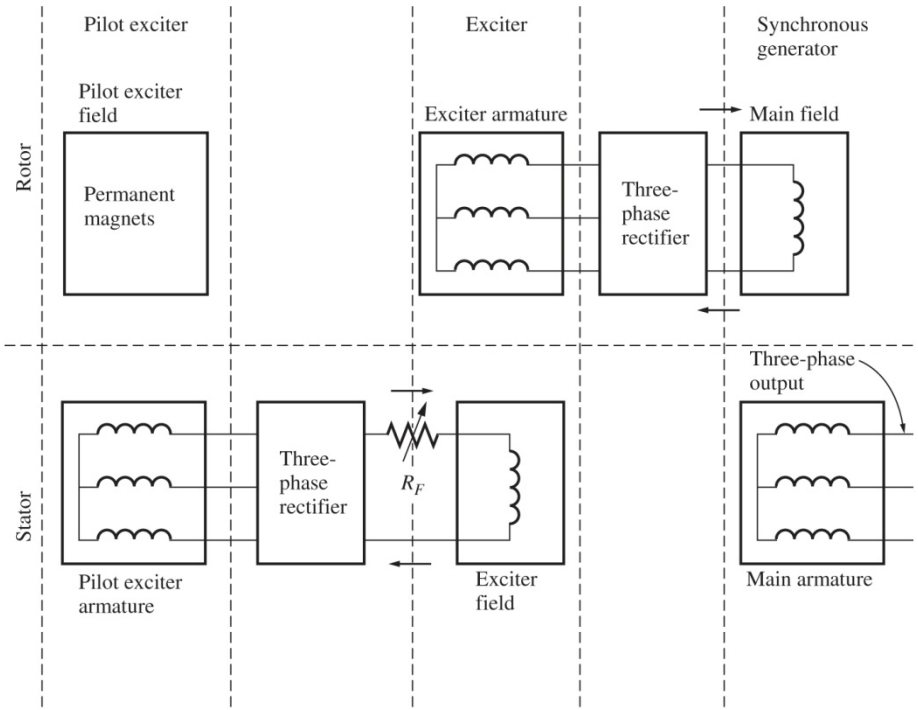

Figure 4-5
A brushless excitation scheme that includes a pilot exciter. The permanent magnets of the pilot generator produces a field current of the exciter which in turns produces the field current of the main machine.

Copyright © The McGraw-Hill Companies, Inc. Permission required for reproduction or display.

The Speed of Rotation of a Synchronous Generator

$$f_e = \frac{n_m P}{120}$$

Where

f_e = electrical frequency, in Hz

n_m = mechanical speed of magnetic field, in rpm
= rotor speed, in rpm

P = number of poles

Copyright © The McGraw-Hill Companies, Inc. Permission required for reproduction or display.

The Internal Generated Voltage of a Synchronous Generator

- It was shown previously, the magnitude of the voltage induced in a given stator phase was found to be

$$E_A = \sqrt{2}\pi N_c \phi f = \frac{N_c \phi}{\sqrt{2}} \omega$$

- The induced voltage is proportional to the rotor flux for a given rotor angular frequency in electrical Radians per second.

- Since the rotor flux depends on the field current I_F, the induced voltage E_A is related to the field current as shown below. This is generator *magnetization curve* or the *open-circuit characteristics* of the machine.

Copyright © The McGraw-Hill Companies, Inc. Permission required for reproduction or display.

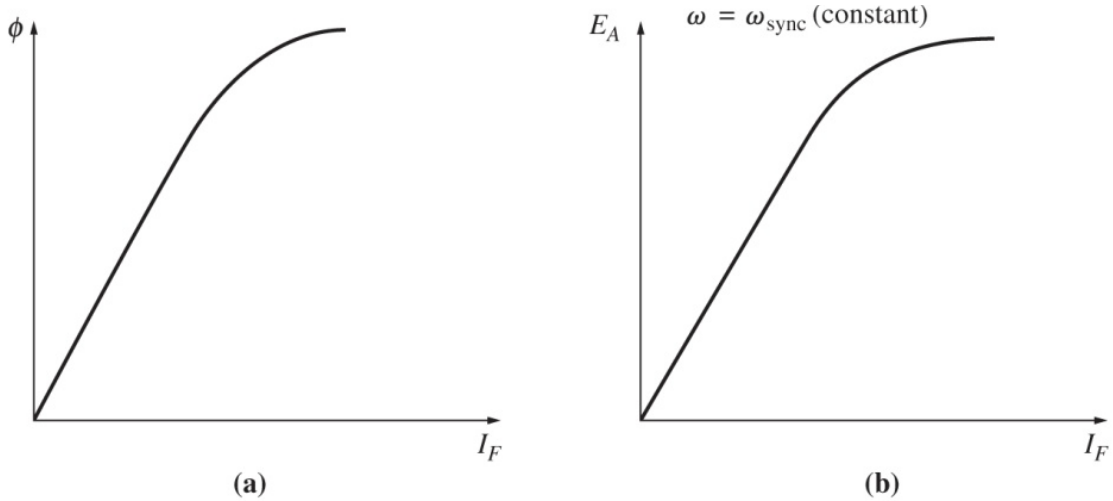

Figure 4-7
(a) Plot of flux versus field current for a synchronous generator. (b) The magnetization curve for the synchronous generator.

Copyright © The McGraw-Hill Companies, Inc. Permission required for reproduction or display.

- Equivalent Model in Steady State:

$$X_S = X_{AR} + X_\ell$$

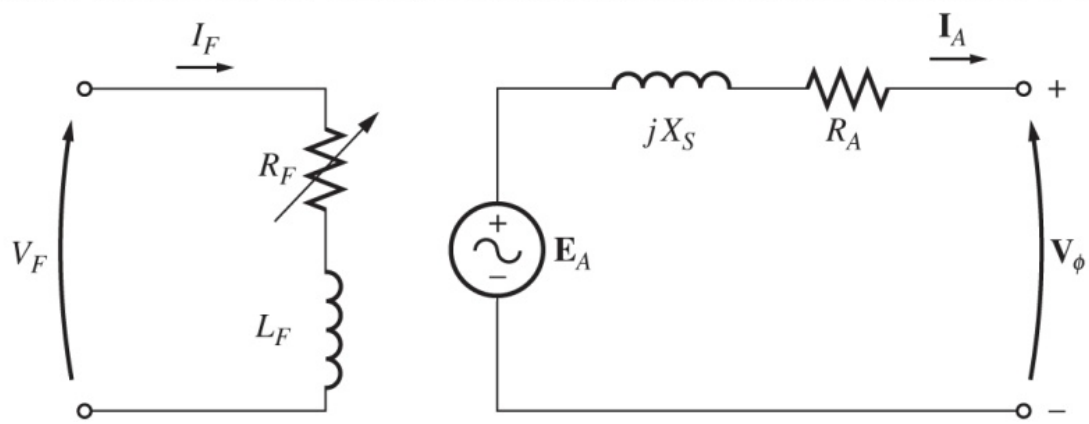

Figure 4-12
The per phas

Copyright © The McGraw-Hill Companies, Inc. Permission required for reproduction or display.

The Phasor Diagram of a Synchronous Generator

- The Kirchhoff's voltage law equation for the armature circuit is

$$\boldsymbol{E_A} = \boldsymbol{V}_{\varphi} + \boldsymbol{I_A}(R_A + jX_S)$$

- The phasor diagrams for unity, lagging, and leading power factors load are shown here:

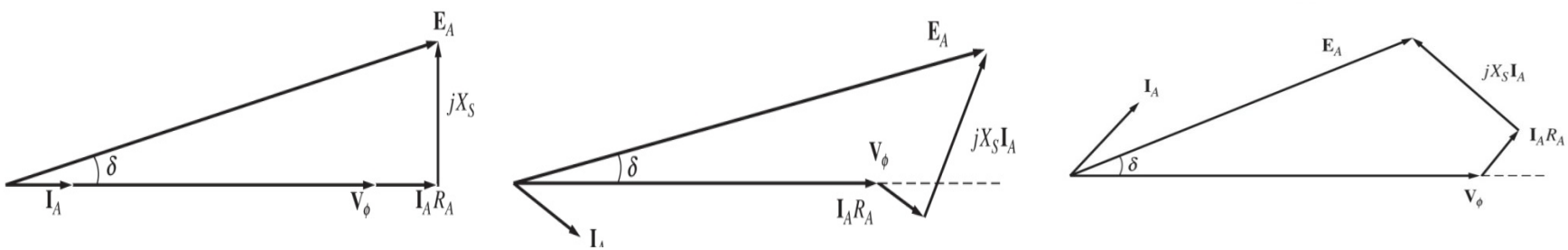

Copyright © The McGraw-Hill Companies, Inc. Permission required for reproduction or display.

- The input mechanical power is given by

$$P_{in} = \tau_{app}\omega_m$$

- The power converted from mechanical to electrical power is given by

$$P_{conv} = \tau_{ind}\omega_m = E_A I_A Cos(\gamma)$$

- The real and reactive electrical output power is given by

$$P_{OUT} = 3V_\phi I_A Cos(\theta)$$
$$Q_{OUT} = 3V_\phi I_A Sin(\theta)$$

Copyright © The McGraw-Hill Companies, Inc. Permission required for reproduction or display.

- If the armature resistance is ignored (Since $R_A << X_S$),

$$I_A Cos(\theta) = \frac{E_A Sin(\delta)}{X_S}$$

$$P_{CONV} \square P_{OUT} = \frac{3V\phi E_A Sin(\delta)}{X_S}$$

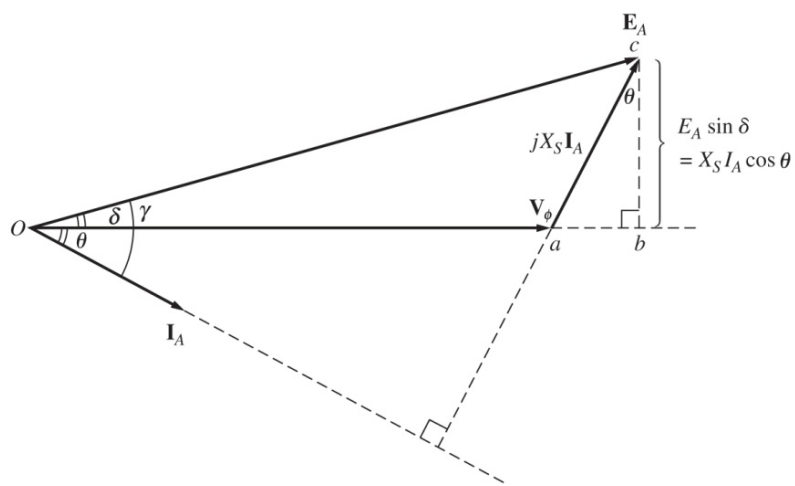

Figure 4-16

Simplified phasor diagram with armature resistance ignored

Copyright © The McGraw-Hill Companies, Inc. Permission required for reproduction or display.

Frequency-Power Characteristics of a Synchronous Generator

$$P = S_P(f_{nl} - f_{sys})$$

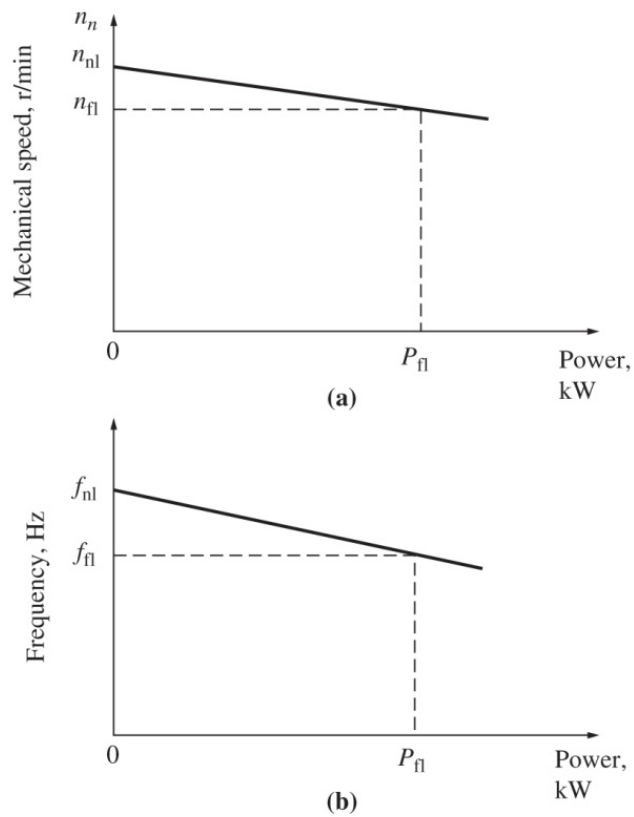

Figure 4-29
(a) The speed-power curve for a typical prime mover. (b) The resulting frequency-power curve for the generator.

Copyright © The McGraw-Hill Companies, Inc. Permission required for reproduction or display.

Voltage-Reactive Power Characteristics of a Synchronous Generator

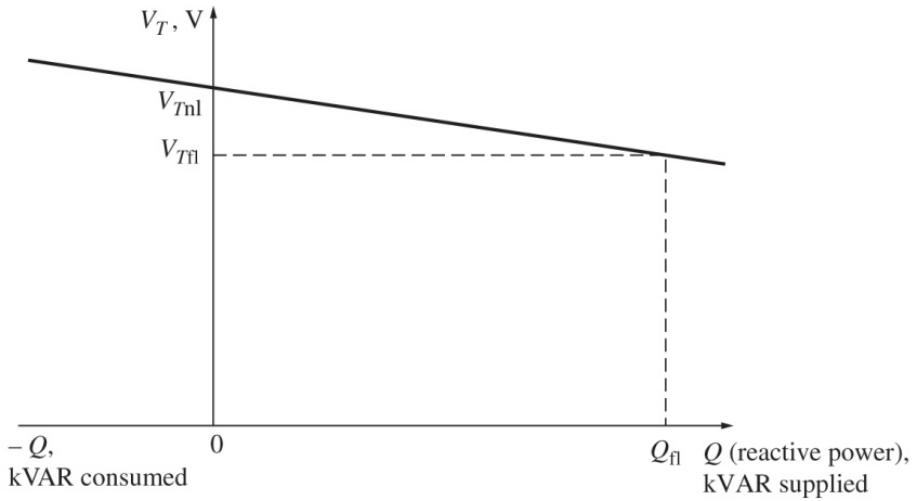

Figure 4-30
Terminal voltage versus reactive power characteristics, assuming generator's voltage regulator produces an output that is linear with changes in reactive power

Copyright © The McGraw-Hill Companies, Inc. Permission required for reproduction or display.

Operation of Synchronous Generators in Parallel with Large Power Systems

- Since infinite bus has a constant voltage and frequency, its *f-P* and *V-Q characteristics are horizontal lines*

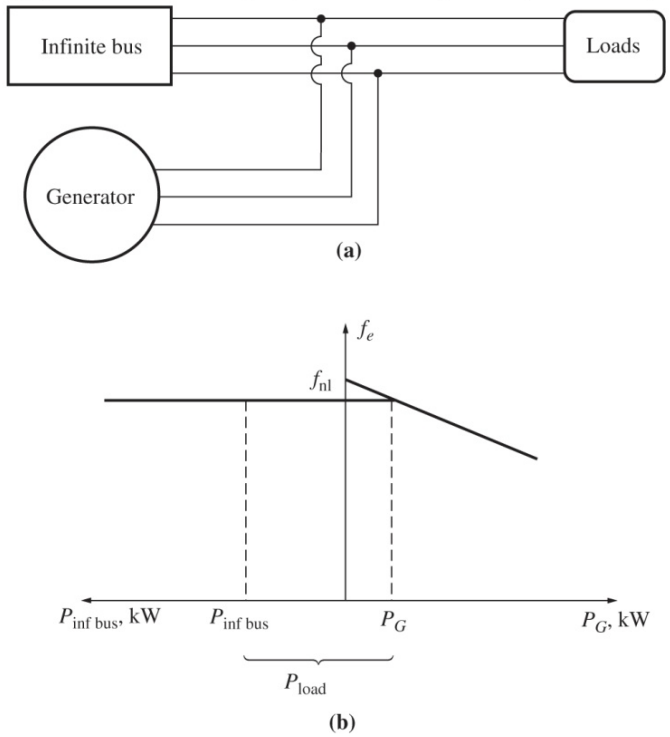

Figure 4-33
(a) A synchronous generator operating in parallel with an infinite bus.(b) The *f-P* diagram (*or house diagram*) for a synchronous generator in parallel with an infinite bus.

Copyright © The McGraw-Hill Companies, Inc. Permission required for reproduction or display.

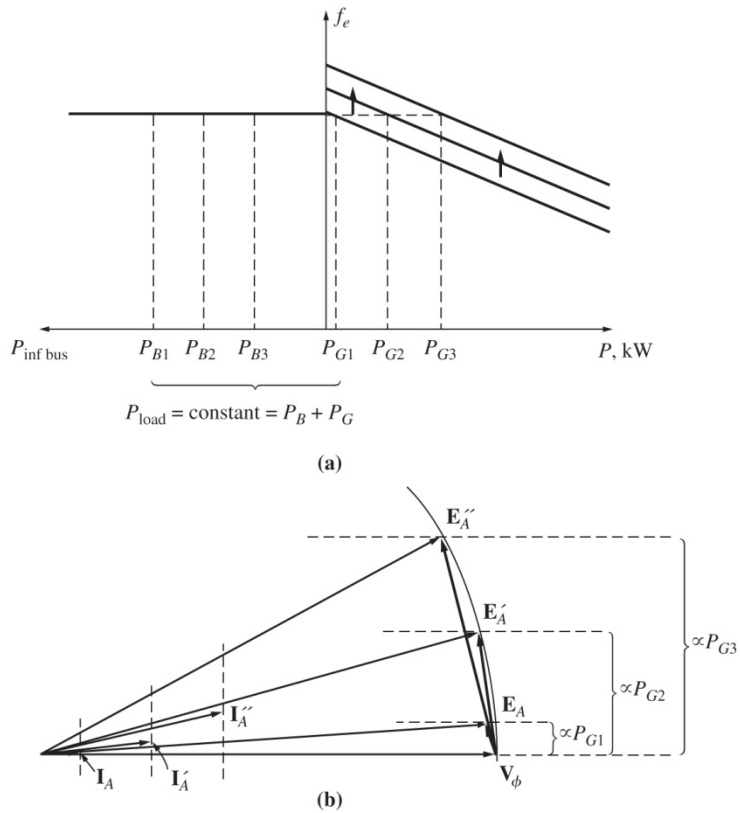

Figure 4-36
The effect of increasing the governor's set point on at constant excitation (a) the house diagram; (b) the phasor diagram.

Copyright © The McGraw-Hill Companies, Inc. Permission required for reproduction or display.

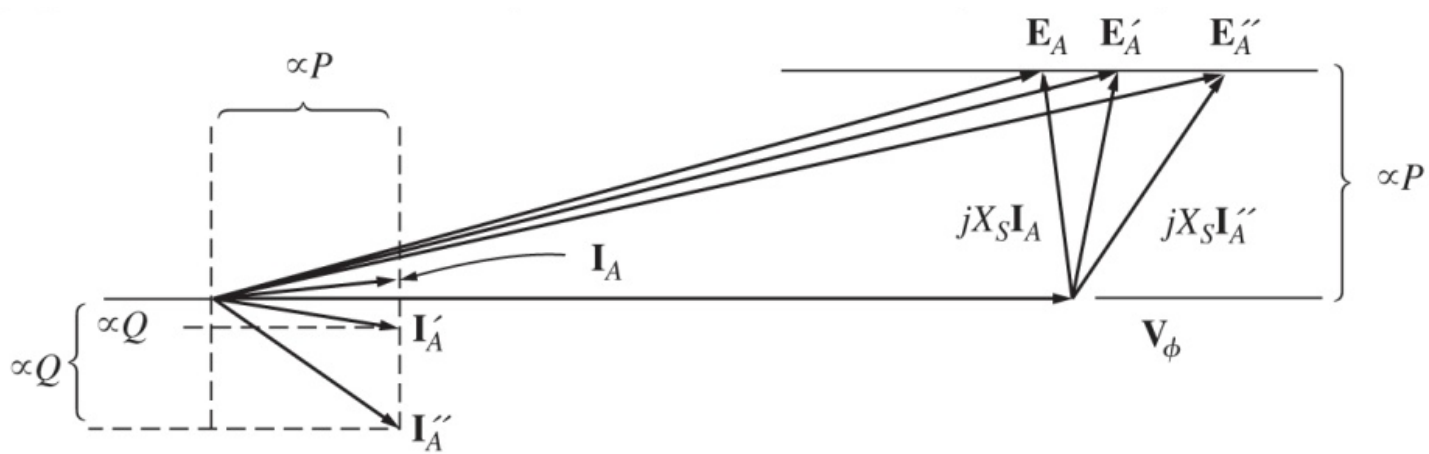

Figure 4-37
The effect of increasing the generator's field current at constant power on the phasor diagram of the machine

Copyright © The McGraw-Hill Companies, Inc. Permission required for reproduction or display.

Operation of Synchronous Generators in Parallel with Other Generators of the Same Size

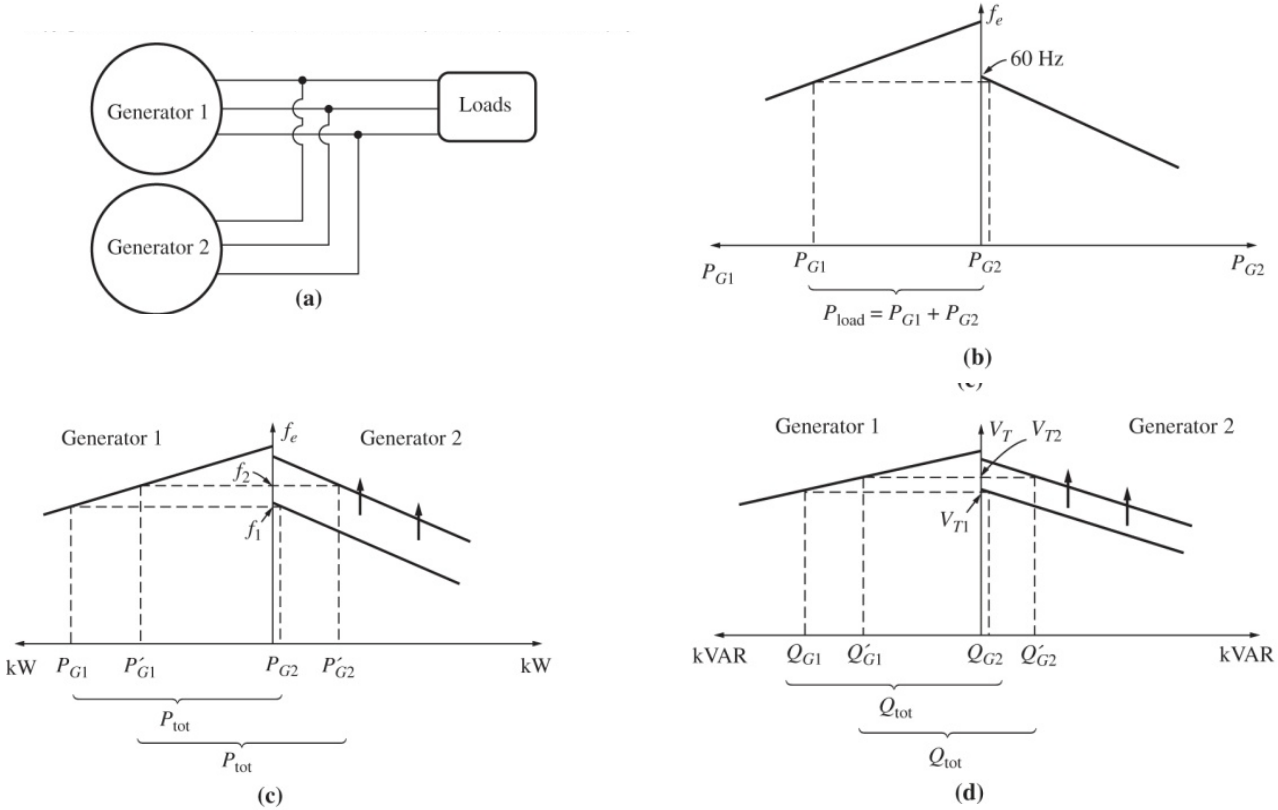

Figure 4-38
(a) A generator connected in parallel with another machine of the same size. (b) The corresponding house diagrams at the moment generator 2 is paralleled with the system. (c) The effect of increasing generator 2's governor set point on the operation of the system. (d) The effect of increasing generator 2's field current on the operation of the system

Copyright © The McGraw-Hill Companies, Inc. Permission required for reproduction or display.

Operation of Synchronous Generators in Parallel with Other Generators of the Same Size

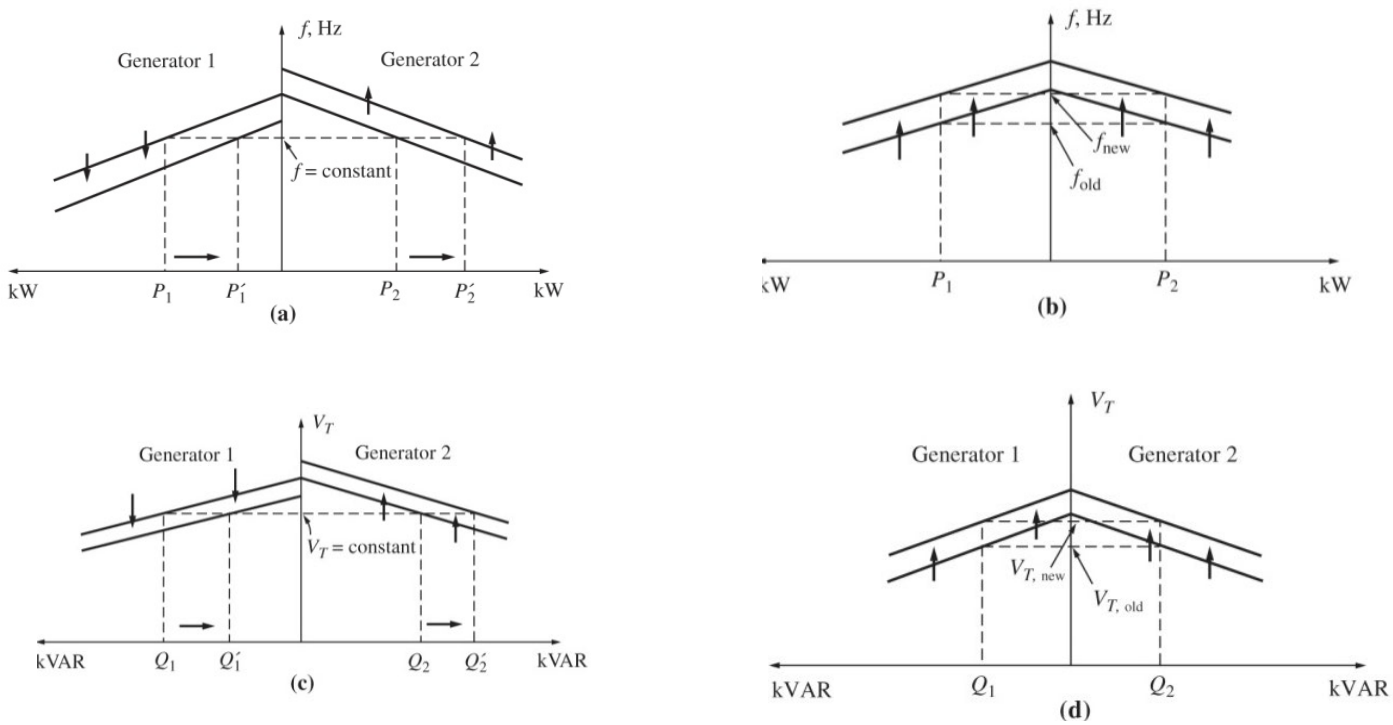

Figure 4-40
(a) Shifting power sharing without affecting system frequency. (b) Shifting system frequency without affecting power sharing. (c) Shifting reactive power sharing without affecting terminal voltage. (d) Shifting terminal voltage without affecting reactive power sharing.

Copyright © The McGraw-Hill Companies, Inc. Permission required for reproduction or display.

Synchronous Generator Transients

- Static stability limit is the maximum power generator can supply under *gradual* load change.

$$P_{\max} = \frac{3V_{\phi}E_{A}}{X_{S}}$$

- Transient stability limit is the maximum power generator can supply under *sudden* load change. The machine's reactance during these changes is different than the one during steady-state condition.

Copyright © The McGraw-Hill Companies, Inc. Permission required for reproduction or display.

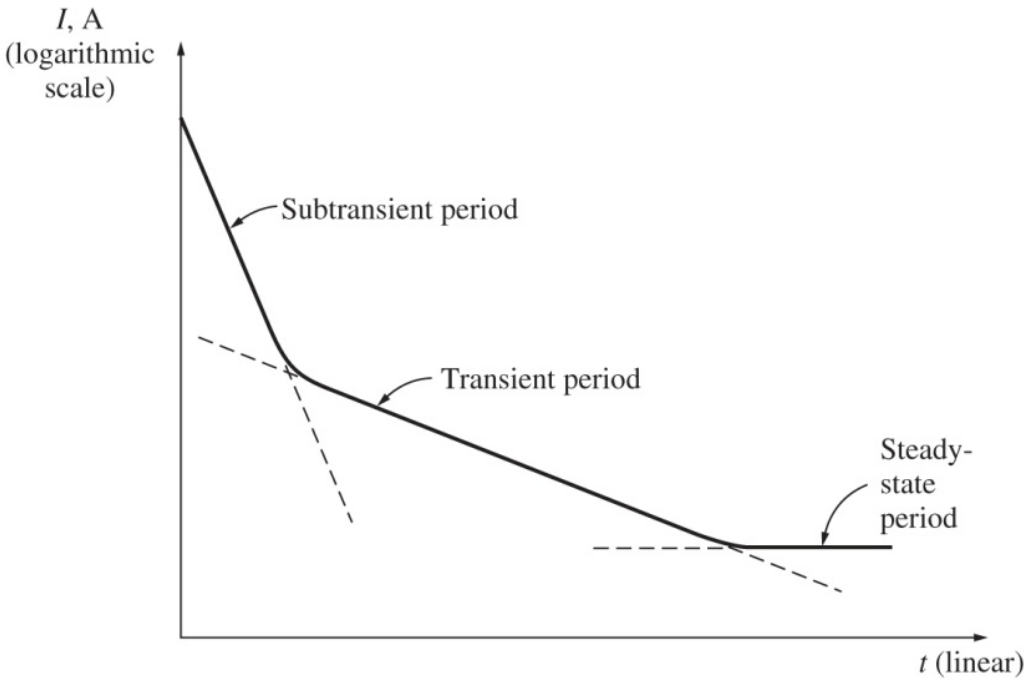

Figure 4-46
A semilogarithmic plot of the magnitude of the ac component of the fault current as a function of time. The subtransient and transient time constants of the generator can be determined from such plots.

Copyright © The McGraw-Hill Companies, Inc. Permission required for reproduction or display.